UNIVERSITY OF CAMBRIDGE INTERNATIONAL EXAMINATIONS
International General Certificate of Secondary Education

COMBINED SCIENCE **0653/01**

Paper 1 Multiple Choice

May/June 2005

45 minutes

Additional Materials: Multiple Choice Answer Sheet
Soft clean eraser
Soft pencil (type B or HB is recommended)

READ THESE INSTRUCTIONS FIRST

Write in soft pencil.
Do not use staples, paper clips, highlighters, glue or correction fluid.
Write your name, Centre number and candidate number on the answer sheet in the spaces provided unless this has been done for you.

There are **forty** questions on this paper. Answer **all** questions.
For each question there are four possible answers **A**, **B**, **C** and **D**. Choose the **one** you consider correct and record your choice in **soft pencil** on the separate answer sheet.

Read the instructions on the answer sheet very carefully.

Each correct answer will score one mark. A mark will not be deducted for a wrong answer.
Any rough working should be done in this booklet.
A copy of the Periodic Table is printed on page 20.

This document consists of **18** printed pages and **2** blank pages.

IB05 06_0653_01/RP
© UCLES 2005

UNIVERSITY of CAMBRIDGE
International Examinations

[Turn over

www.theallpapers.com

1 Water enters a plant cell.

In what order does water pass through the cell structures before reaching the vacuole?

A cell surface membrane → cell wall → cytoplasm

B cell wall → cell surface membrane → cytoplasm

C cell wall → cytoplasm → cell surface membrane

D cytoplasm → cell wall → cell surface membrane

2 When a plant cell is placed in a dilute solution of red dye, the contents of the cell do not become red.

What prevents the dye molecules from entering the cell?

A cell membrane

B chloroplasts

C cytoplasm

D vacuole

3 Which statement about enzymes is correct?

A They are made of carbohydrate.

B They are **not** denatured by high temperatures.

C They speed up chemical reactions.

D They work only inside living cells.

© UCLES 2005

www.theallpapers.com

4 The diagram shows a section through a leaf.

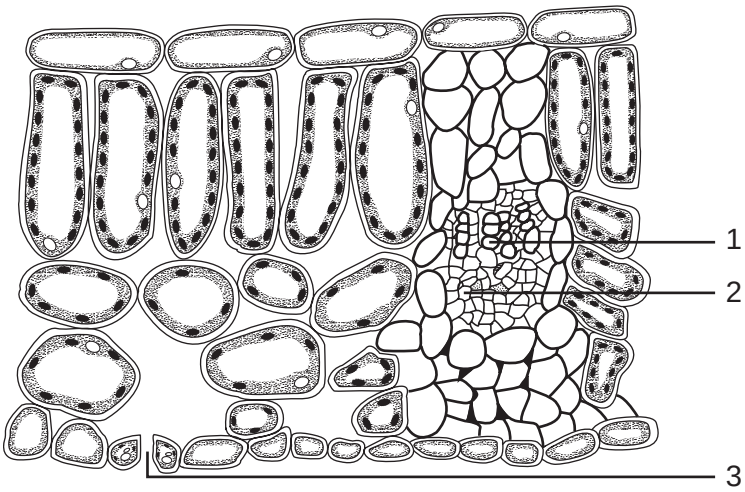

Which part brings water to the leaf and through which part does the water leave the leaf?

	brings water	water leaves
A	1	2
B	1	3
C	2	1
D	3	1

5 Which two nutrients are needed for healthy bone and tooth development?

A calcium and iron

B iron and vitamin C

C vitamin C and vitamin D

D vitamin D and calcium

www.theallpapers.com

6 The diagram shows apparatus at the start of a breathing experiment.

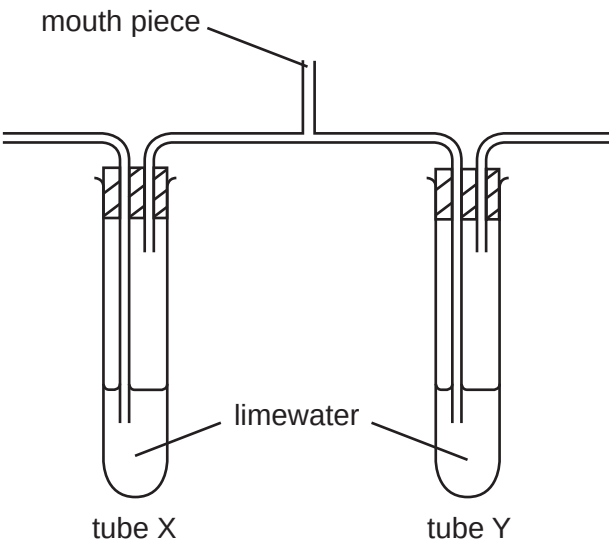

A person breathes in and out through the mouth piece for a short time.

Which shows the results?

	limewater in tube X	limewater in tube Y
A	goes cloudy	goes cloudy
B	goes cloudy	stays clear
C	stays clear	goes cloudy
D	stays clear	stays clear

7 Which structure supplies oxygenated blood to the heart muscle?

A coronary artery

B pulmonary artery

C right atrium

D vena cava

8 Which organ makes insulin?

A kidney

B liver

C pancreas

D stomach

www.theallpapers.com

9 The diagrams show a sperm and an egg.

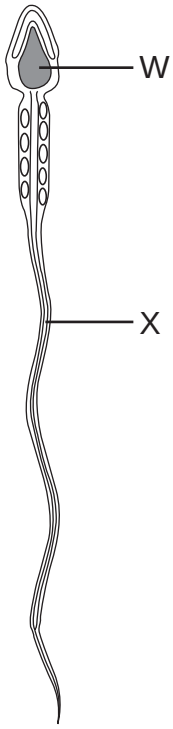

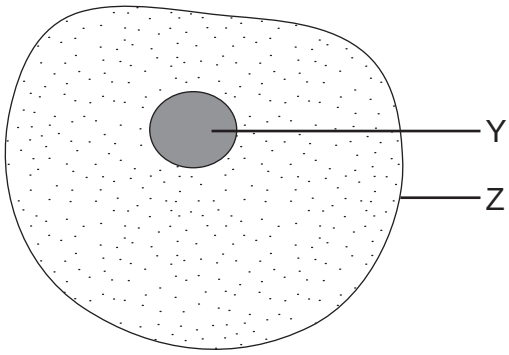

Which structures fuse during fertilisation?

A W and Y **B** W and Z **C** X and Y **D** X and Z

10 The diagram shows a section through a flower.

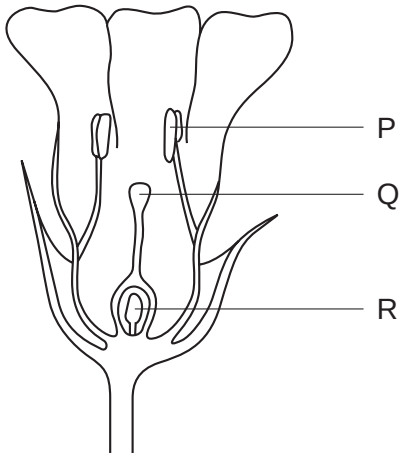

Where are male gametes and female gametes made?

	male gametes	female gametes
A	P	R
B	Q	P
C	R	P
D	R	Q

www.theallpapers.com

11 How does the IUD (intra-uterine device) prevent pregnancy?

A kills the sperms

B prevents egg production

C prevents fertilisation

D prevents implantation

12 In a photosynthesis experiment, a plant is left in bright sunlight for several hours. A leaf is then removed from the plant and tested for starch, using iodine solution.

The diagram shows the leaf from the plant that was used in the experiment.

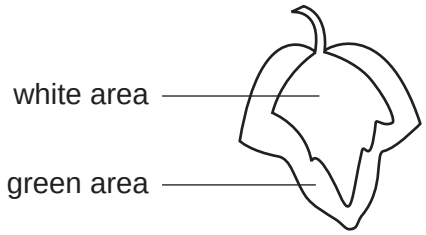

Which diagram shows the result of the experiment?

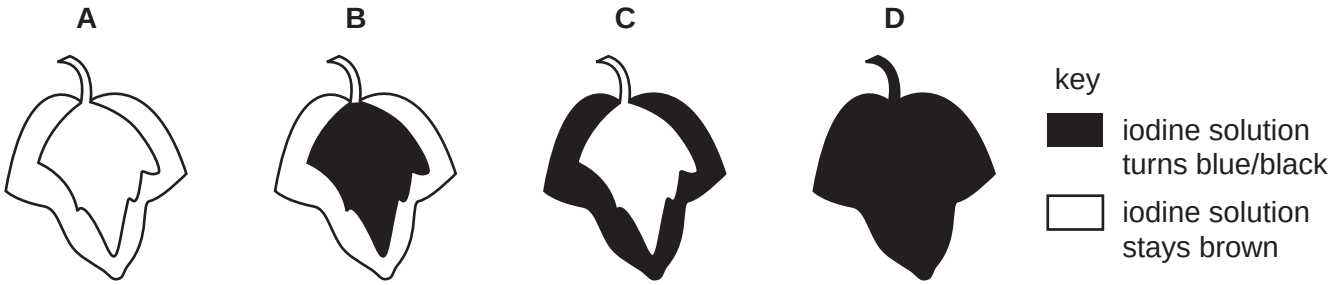

13 What is the cause of variation?

	genes	environment
A	✓	✓
B	✓	✗
C	✗	✓
D	✗	✗

www.theallpapers.com

14 An examiner with poor handwriting writes a question about element Y.

The question says that Y

- burns,
- conducts electricity.

A typist – who has studied IGCSE Combined Science – is given the question to type.

Which of these two properties tell the typist to type ^{7}Y and not $_{7}Y$?

	burns	conducts electricity
A	✓	✓
B	✓	✗
C	✗	✓
D	✗	✗

15 Which method of separation can be used to obtain pure water from aqueous potassium chloride?

A chromatography

B crystallisation

C distillation

D filtration

16 Which gases have molecules that contain one or more double covalent bonds?

	carbon dioxide	ethene	hydrogen chloride
A	✓	✓	✓
B	✓	✓	✗
C	✗	✓	✓
D	✗	✗	✓

17 Which three elements are all transition elements?

A chlorine, bromine and iodine

B helium, neon and argon

C lithium, sodium and potassium

D iron, cobalt and nickel

www.theallpapers.com

18 A solid **X** is placed in the circuit shown. The lamp lights.

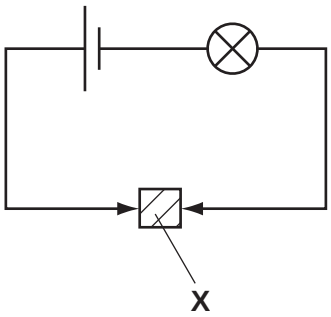

What is solid **X**?

A an alloy

B a compound

C an electrolyte

D a salt

19 Copper(II) oxide is mixed with solid **S**.

On heating the mixture, a reaction occurs and the limewater turns cloudy.

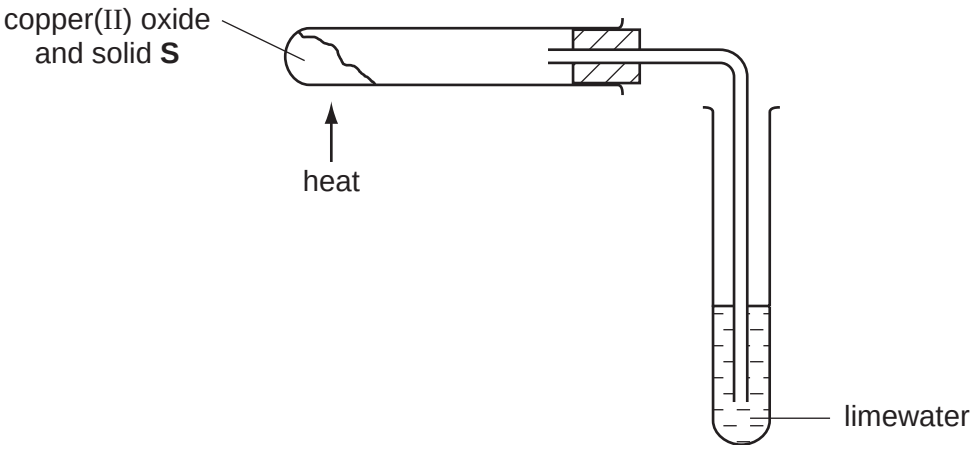

What is solid **S**?

A carbon **B** iron **C** sodium **D** zinc

www.theallpapers.com

20 An excess of each of metals **X**, **Y** and **Z** is separately added to water. The pH of each of the resulting liquids is measured.

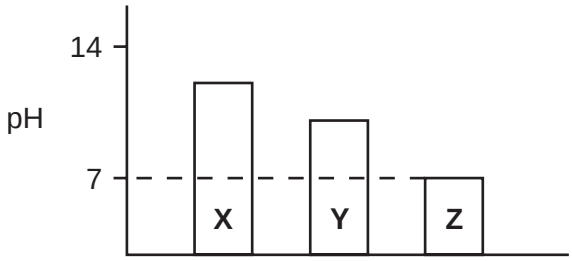

Which metals are **X**, **Y** and **Z**?

	X	Y	Z
A	copper	calcium	sodium
B	copper	sodium	calcium
C	sodium	calcium	copper
D	sodium	copper	calcium

21 How are salts formed from acids?

A Hydrogen is replaced by a metal.

B Hydrogen is replaced by a non-metal.

C Oxygen is replaced by a metal.

D Oxygen is replaced by a non-metal.

22 The equations for two reactions are shown.

X $PbCO_3 \rightarrow PbO + CO_2$

Y $CH_4 + 2O_2 \rightarrow CO_2 + 2H_2O$

Which types of reaction are **X** and **Y**?

	X	Y
A	combustion	thermal decomposition
B	combustion	neutralisation
C	thermal decomposition	combustion
D	thermal decomposition	neutralisation

www.theallpapers.com

23 An electrolysis circuit is set up using carbon electrodes as shown.

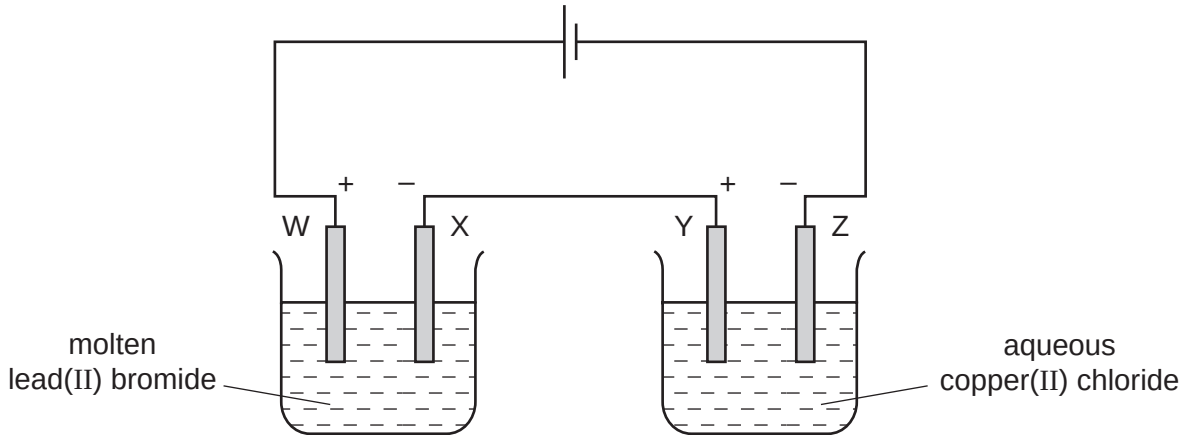

At which two electrodes would a Group VII element be formed?

A W and Y **B** W and Z **C** X and Y **D** X and Z

24 Which reagents, in aqueous solution, **all** give a white precipitate when added drop by drop to aqueous zinc chloride?

A ammonia, barium chloride and hydrochloric acid

B ammonia, barium chloride and silver nitrate

C ammonia, silver nitrate and sodium hydroxide

D hydrochloric acid, silver nitrate and sodium hydroxide

25 A pan of hot oil on a cooker catches fire.

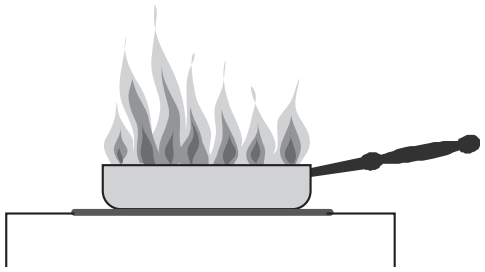

After switching off the cooker, the fire is put out by covering the pan with a cloth.

Why does the cloth put out the fire?

A The cloth absorbs the heat of the flames.

B The cloth cuts off the air supply.

C The cloth is not able to burn.

D The cloth soaks up all the oil.

www.theallpapers.com

26 How can a plastic be described?

A a mixture of ions

B a mixture of long chain molecules

C a mixture of atoms of metals

D a mixture of small hydrocarbon molecules

27 A hydrocarbon fuel is burnt completely.

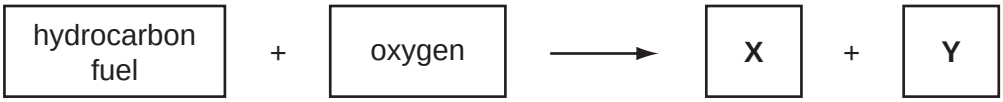

What are the products of this reaction?

	X	Y
A	CO	H_2
B	CO	H_2O
C	CO_2	H_2
D	CO_2	H_2O

28 A decorator wishes to calculate the area of a bathroom tile so that he can estimate the amount of adhesive which he needs to buy.

What must he use?

A a measuring cylinder only

B a ruler only

C a measuring cylinder and a clock only

D a measuring cylinder and a ruler only

www.theallpapers.com

29 A moving car drips oil on to a road at a steady rate.

Which diagram shows that the speed of the car is increasing?

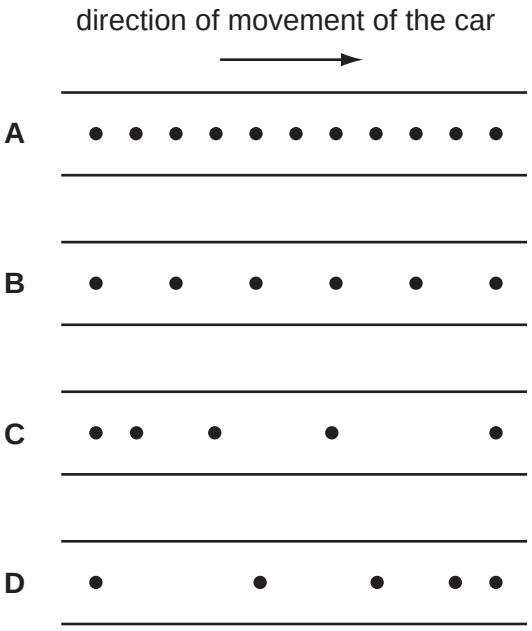

30 Which statement is correct?

A The mass of a bottle of water at the North Pole is different from its mass at the Equator.

B The mass of a bottle of water is measured in newtons.

C The weight of a bottle of water and its mass are the same thing.

D The weight of a bottle of water is one of the forces acting on it.

www.theallpapers.com

31 Objects with different masses are hung on a 10 cm spring. The diagram shows how much the spring stretches.

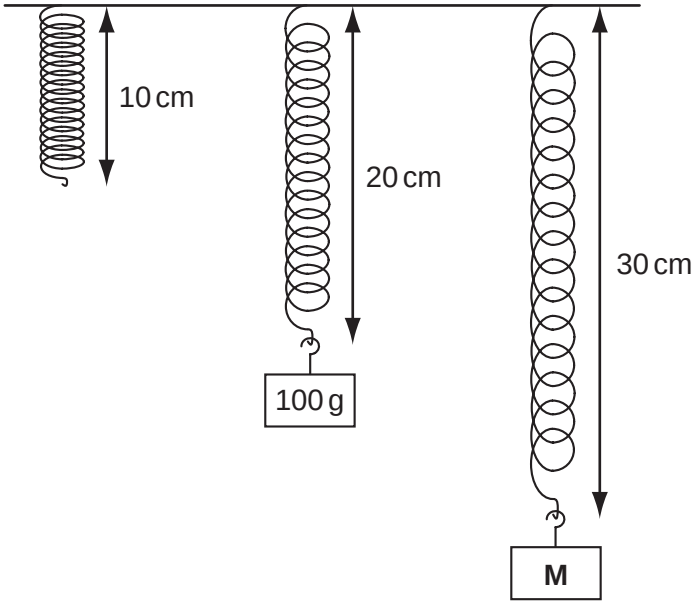

The extension of the spring is directly proportional to the mass hung on it.

What is the mass of object **M**?

A 110 g **B** 150 g **C** 200 g **D** 300 g

32 A power station uses nuclear fission to obtain energy.

In this process, nuclear energy is **first** changed into

A chemical energy.

B electrical energy.

C heat energy.

D potential energy.

33 A ball is released from rest and rolls down a track from the position shown.

What is the furthest position the ball could reach?

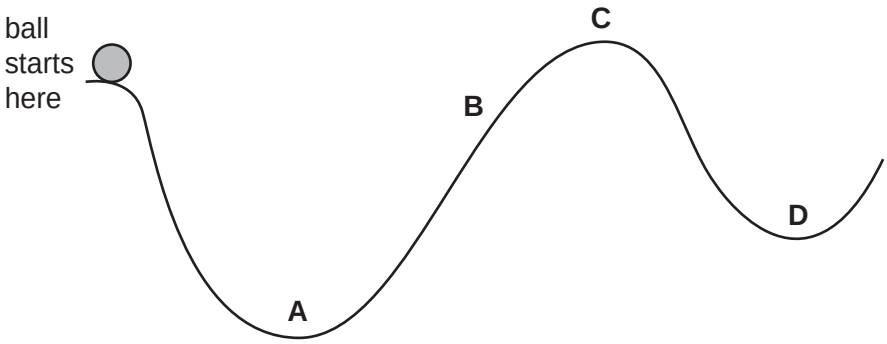

www.theallpapers.com

34 An iron bar is held with one end in a fire. The other end soon becomes too hot to hold.

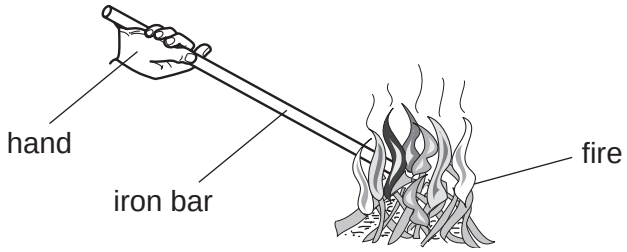

How has the heat travelled along the iron bar?

A by conduction

B by convection

C by expansion

D by radiation

35 The diagram shows a block of ice placed in a warm room.

At which point is the temperature the **lowest**?

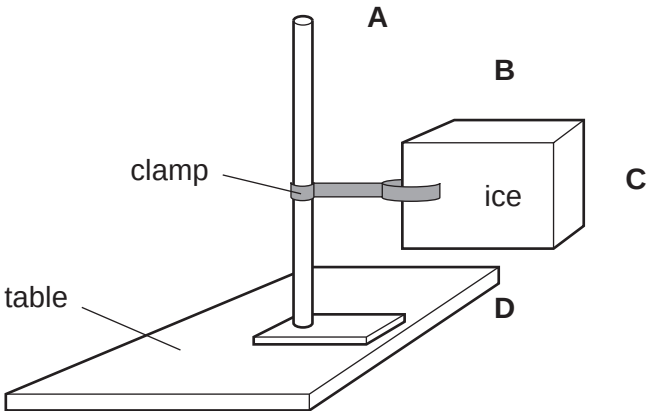

www.theallpapers.com

36 The ray diagram shows how an image is formed by a converging lens.

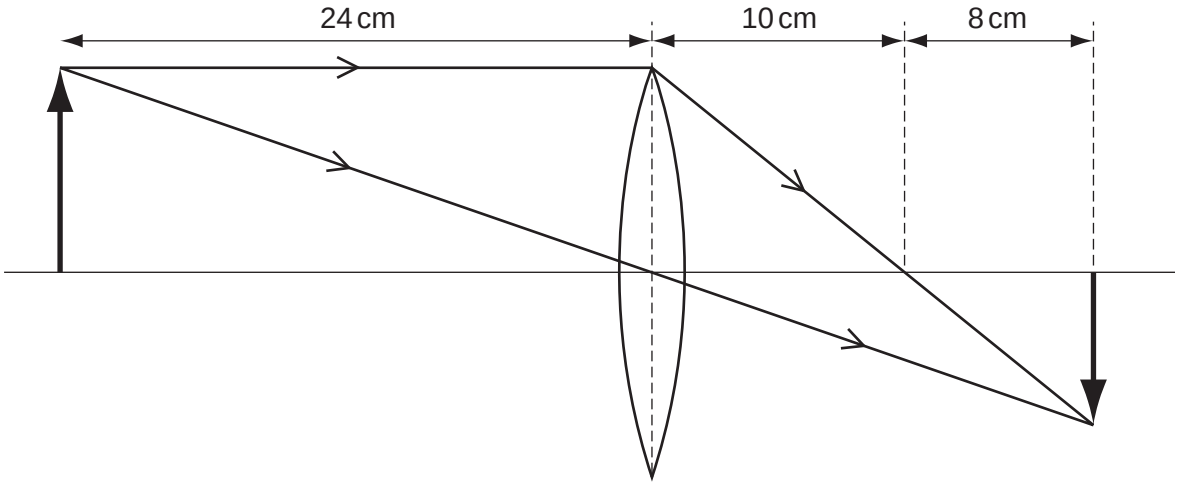

What is the focal length of this lens?

A 8 cm **B** 10 cm **C** 18 cm **D** 24 cm

37 In which circuit does the voltmeter read the potential difference across the lamp?

A

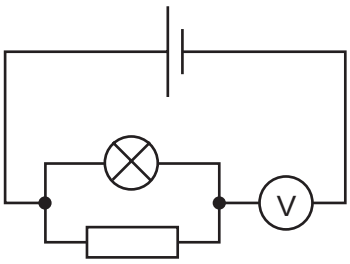

B

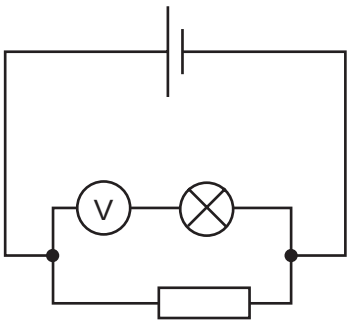

C

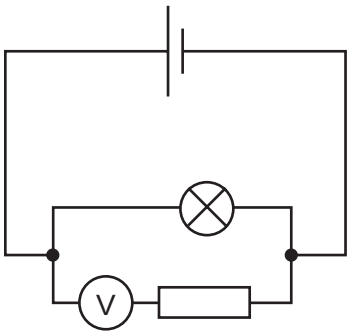

D

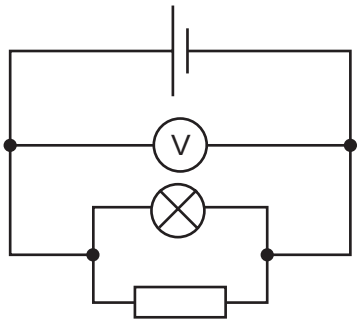

www.theallpapers.com

38 In the circuit below, X and Y are identical 6 V lamps.

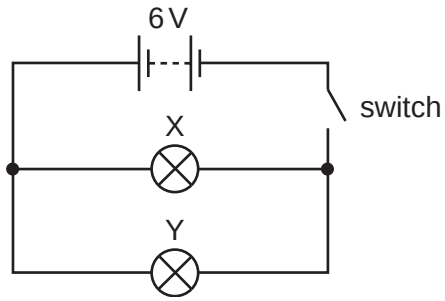

What happens when the switch is closed?

A X lights more brightly than Y.

B Y lights more brightly than X.

C X and Y light with equal brightness.

D Neither X nor Y light.

39 A student makes the circuit shown.

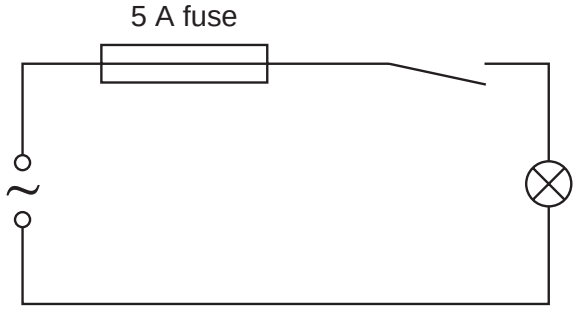

The fuse has blown and stopped the current.

What could have caused this?

A The current rating of the fuse was too high.

B The current was too large.

C The lamp was loose.

D The voltage was too small.

www.theallpapers.com

40 The activity of a radioactive source is measured at intervals during a period of 1200 s.

The results are given in the table.

time / s	activity / counts per second
0	101
300	50
600	?
900	13
1200	6

Which reading is most likely at 600 s?

A 19 **B** 24 **C** 31 **D** 37

www.theallpapers.com

BLANK PAGE

www.theallpapers.com

BLANK PAGE

Every reasonable effort has been made to trace all copyright holders where the publishers (i.e. UCLES) are aware that third-party material has been reproduced. The publishers would be pleased to hear from anyone whose rights they have unwittingly infringed.

www.theallpapers.com

DATA SHEET
The Periodic Table of the Elements

Group I	Group II											Group III	Group IV	Group V	Group VI	Group VII	Group 0
							1 H Hydrogen 1										4 He Helium 2
7 Li Lithium 3	9 Be Beryllium 4											11 B Boron 5	12 C Carbon 6	14 N Nitrogen 7	16 O Oxygen 8	19 F Fluorine 9	20 Ne Neon 10
23 Na Sodium 11	24 Mg Magnesium 12											27 Al Aluminium 13	28 Si Silicon 14	31 P Phosphorus 15	32 S Sulphur 16	35.5 Cl Chlorine 17	40 Ar Argon 18
39 K Potassium 19	40 Ca Calcium 20	45 Sc Scandium 21	48 Ti Titanium 22	51 V Vanadium 23	52 Cr Chromium 24	55 Mn Manganese 25	56 Fe Iron 26	59 Co Cobalt 27	59 Ni Nickel 28	64 Cu Copper 29	65 Zn Zinc 30	70 Ga Gallium 31	73 Ge Germanium 32	75 As Arsenic 33	79 Se Selenium 34	80 Br Bromine 35	84 Kr Krypton 36
85 Rb Rubidium 37	88 Sr Strontium 38	89 Y Yttrium 39	91 Zr Zirconium 40	93 Nb Niobium 41	96 Mo Molybdenum 42	Tc Technetium 43	101 Ru Ruthenium 44	103 Rh Rhodium 45	106 Pd Palladium 46	108 Ag Silver 47	112 Cd Cadmium 48	115 In Indium 49	119 Sn Tin 50	122 Sb Antimony 51	128 Te Tellurium 52	127 I Iodine 53	131 Xe Xenon 54
133 Cs Caesium 55	137 Ba Barium 56	139 La Lanthanum 57 *	178 Hf Hafnium 72	181 Ta Tantalum 73	184 W Tungsten 74	186 Re Rhenium 75	190 Os Osmium 76	192 Ir Iridium 77	195 Pt Platinum 78	197 Au Gold 79	201 Hg Mercury 80	204 Tl Thallium 81	207 Pb Lead 82	209 Bi Bismuth 83	Po Polonium 84	At Astatine 85	Rn Radon 86
Fr Francium 87	226 Ra Radium 88	227 Ac Actinium 89															

140 Ce Cerium 58	141 Pr Praseodymium 59	144 Nd Neodymium 60	Pm Promethium 61	150 Sm Samarium 62	152 Eu Europium 63	157 Gd Gadolinium 64	159 Tb Terbium 65	162 Dy Dysprosium 66	165 Ho Holmium 67	167 Er Erbium 68	169 Tm Thulium 69	173 Yb Ytterbium 70	175 Lu Lutetium 71
232 Th Thorium 90	Pa Protactinium 91	238 U Uranium 92	Np Neptunium 93	Pu Plutonium 94	Am Americium 95	Cm Curium 96	Bk Berkelium 97	Cf Californium 98	Es Einsteinium 99	Fm Fermium 100	Md Mendelevium 101	No Nobelium 102	Lr Lawrencium 103

*58-71 Lanthanoid series
90-103 Actinoid series

Key

a X b	a = relative atomic mass X = atomic symbol b = proton (atomic) number

The volume of one mole of any gas is 24 dm^3 at room temperature and pressure (r.t.p.).

University of Cambridge International Examinations is part of the University of Cambridge Local Examinations Syndicate (UCLES), which is itself a department of the University of Cambridge.

www.theallpapers.com