Centre Number	Candidate Number	Name

UNIVERSITY OF CAMBRIDGE INTERNATIONAL EXAMINATIONS
General Certificate of Education Advanced Level

PHYSICS **9702/05**

Paper 5 Practical Test

October/November 2005

1 hour 30 minutes

Candidates answer on the Question Paper.
Additional Materials: As specified in the Confidential Instructions.

READ THESE INSTRUCTIONS FIRST

Write your Centre number, candidate number and name on all the work you hand in.
Write in dark blue or black pen in the spaces provided on the Question Paper.
You may use a soft pencil for any diagrams, graphs or rough working.
Do not use staples, paper clips, highlighters, glue or correction fluid.

Answer **both** questions.

You are expected to record all your observations as soon as these observations are made, and to plan the presentation of the records so that it is not necessary to make a fair copy of them. The working of the answers is to be handed in.
Marks are mainly given for a clear record of the observations actually made, for their suitability and accuracy, and for the use made of them.
Additional answer paper and graph paper should be submitted only if it becomes necessary to do so.
You are reminded of the need for good English and clear presentation in your answers.

At the end of the examination, fasten all your work securely together.

If you have been given a label, look at the details. If any details are incorrect or missing, please fill in your correct details in the space given at the top of this page.

Stick your personal label here, if provided.

For Examiner's Use	
1	
2	
Total	

This document consists of **9** printed pages and **3** blank pages.

SPA (MML 8097 3/04) S88388/1
© UCLES 2005

UNIVERSITY of CAMBRIDGE International Examinations

[Turn over

www.theallpapers.com

It is recommended that you spend about 60 minutes on this question.

1 In this question you will investigate how the period of oscillation of a mass suspended from a chain of springs depends on the number of springs in the chain.

(a) Clamp the base of the stand to the bench. Suspend six springs in a chain from a clamp mounted on the stand. You should use small hooks to connect the springs to one another. Suspend the 100 g mass from the bottom spring. It will be necessary to allow the chain of springs to overhang the edge of the bench. The arrangement should be as shown in Fig. 1.1.

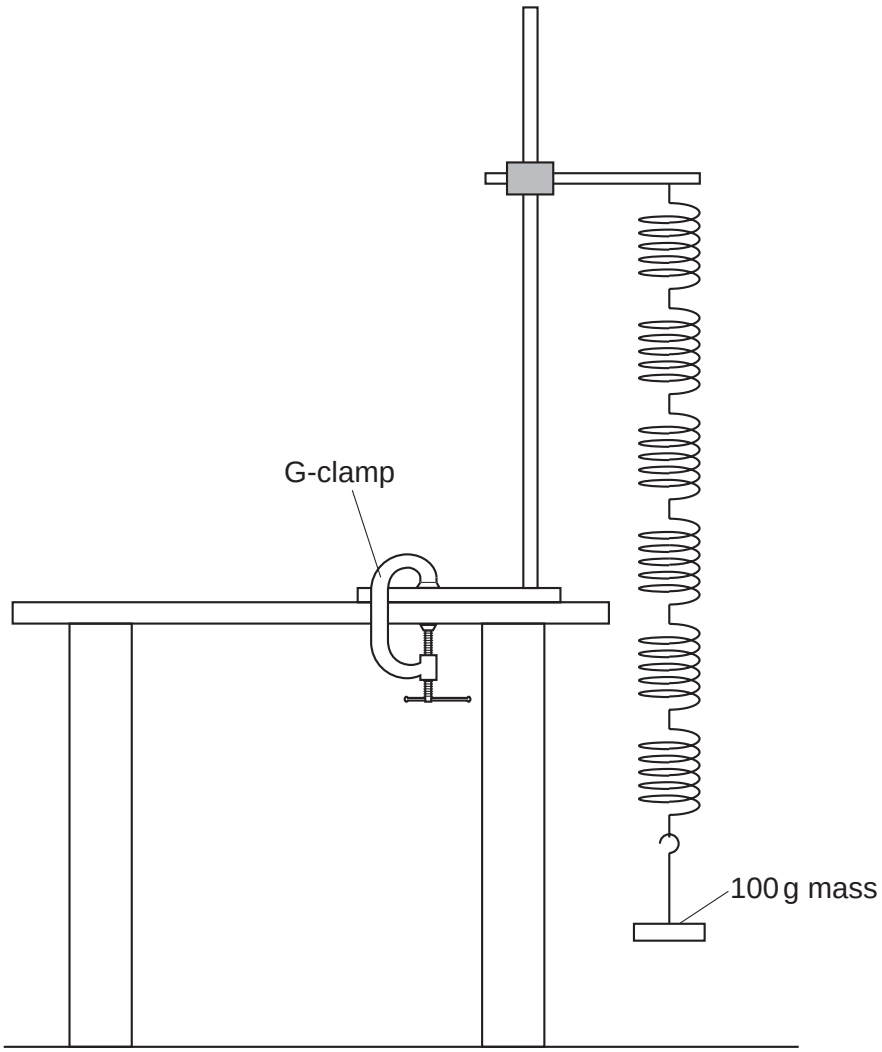

Fig. 1.1

© UCLES 2005

www.theallpapers.com

For Examiner's Use

(b) **(i)** Gently displace the mass and release it so that it performs vertical oscillations. Make measurements to determine the period *T* of the oscillations.

T = ... s

(ii) Estimate the number of oscillations that would need to be timed in order to make the percentage uncertainty in *T* equal to 1%. Show your working.

number of oscillations = ...

© UCLES 2005

www.theallpapers.com

For Examiner's Use

(c) Remove one of the springs from the chain and repeat **(b)(i)**. Repeat this process until you have six sets of readings of T and n, where n is the number of springs in the chain. Include all six sets of values of lg (T / s) and lg n in your table of results.

(d) **(i)** Plot a graph of lg (T / s) (y-axis) against lg n (x-axis).

(ii) Draw the line of best fit.

(iii) Determine the gradient and the y-intercept of this line.

gradient = ...

y-intercept = ...

© UCLES 2005

www.theallpapers.com

For Examiner's Use

www.theallpapers.com

For Examiner's Use

(e) The expression relating T and n is

$$T = pn^q$$

where p and q are constants.

Use your answers from **(d)(iii)** to determine values for p and q. You need not be concerned with the units of these quantities.

p = ...

q = ...

(f) It can be shown that

$$p = \sqrt{\frac{4\pi^2 m}{k}}$$

where m = 0.100 kg and k is the spring constant of each of the springs in the chain.

Determine a value for k. Include an appropriate unit with your value.

k = ...

© UCLES 2005

www.theallpapers.com

BLANK PAGE

www.theallpapers.com

It is recommended that you spend about 30 minutes on this question.

2 A hot wire in air loses energy. Some of the energy is lost to the air particles that hit the wire. This energy lost depends on the number of particles hitting the wire per second, and hence on the air pressure.

If the temperature of the wire is constant then the total energy lost per second is equal to the electrical energy supplied per second.

Design a laboratory experiment to investigate how the total energy lost per second from a wire depends on the air pressure. You should draw a detailed labelled diagram showing the arrangement of your equipment. In your account you should pay particular attention to

(a) the procedure to be followed,

(b) how the electrical energy supplied to the wire per second would be measured,

(c) the type of thermometer used to check that the temperature of the wire remains constant during the experiment,

(d) how the pressure would be changed and measured,

(e) any safety precautions that you would take.

© UCLES 2005

www.theallpapers.com

Diagram

.....

.....

.....

.....

.....

.....

.....

.....

.....

www.theallpapers.com

For Examiner's Use

www.theallpapers.com

BLANK PAGE

www.theallpapers.com

BLANK PAGE

Permission to reproduce items where third-party owned material protected by copyright is included has been sought and cleared where possible. Every reasonable effort has been made by the publisher (UCLES) to trace copyright holders, but if any items requiring clearance have unwittingly been included, the publisher will be pleased to make amends at the earliest possible opportunity.

University of Cambridge International Examinations is part of the University of Cambridge Local Examinations Syndicate (UCLES), which is itself a department of the University of Cambridge.

www.theallpapers.com