CAMBRIDGE INTERNATIONAL EXAMINATIONS
General Certificate of Education Advanced Level

PHYSICS **9702/05**

Paper 5 Practical Test

October/November 2003

CONFIDENTIAL INSTRUCTIONS

1 hour 30 minutes

Great care should be taken that any confidential information given does not reach the candidates either directly or indirectly.

This document consists of **7** printed pages and **1** blank page.

SP (NF/KS) S52613/2
© UCLES 2003

UNIVERSITY of CAMBRIDGE
Local Examinations Syndicate

www.theallpapers.com

Instructions for preparing apparatus

These instructions detail the apparatus required for the experiment in this paper. A summary of the question that will be presented to the candidates is included, to allow the Physics teacher to test the apparatus appropriately. No access is permitted to the Question Paper in advance of the examination session.

Number of sets of apparatus

In addition to a few spare sets, there should ideally be one set of apparatus per candidate.

If this is not possible, then the minimum number of sets of apparatus to be provided should be sufficient for half the candidates to carry out the experiment simultaneously, plus a few spare sets. With this number of sets available, a staggered start to the examination will be required, which may be organised as shown in the diagram below.

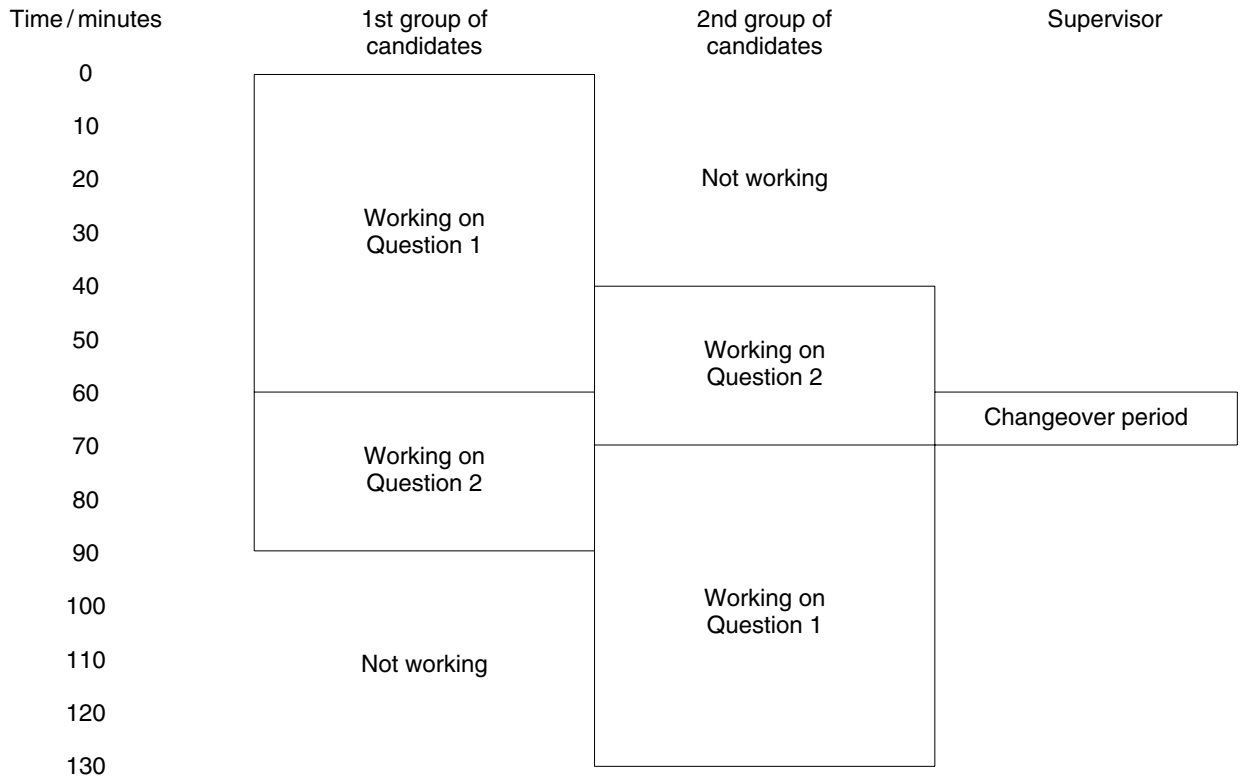

Instructions for the Practical Physics Supervisor

Candidates should be informed that, if they find themselves in real difficulty, they may ask the Supervisor for practical assistance but that the extent of this assistance will be reported to the Examiner, who may make a deduction of marks.

The Supervisor should complete the report form on pages 7 and 8 and enclose it in the envelope containing the answers of the candidates. A note of any help given to, or any particular difficulties experienced by, a candidate should also be enclosed, especially if the Examiner would be unable to discover these from the written answers.

It is assumed that candidates will provide themselves with such standard items as a 30 cm rule, a pair of compasses, a 0° to 180° protractor, a set square and a calculator.

Squared paper should be available.

Whenever a stopwatch or stopclock is specified, candidates should be advised, in advance, that they may, if they wish, use quartz wristwatches with stopwatch facilities.

www.theallpapers.com

Question 1

Apparatus requirement (per set unless otherwise specified)

Miniature 1N4001 1 A plastic encapsulated diode (e.g. RS components stock number 261-148).

Two insulated leads, each about 30 cm in length. The leads should be soldered to the ends of the diode and insulated with lacquer or varnish. A small tag labelled + should be attached to the diode as shown in Fig. 1.1. The diode should operate in the forward-biased mode when the positive terminal is joined to the positive terminal of the power supply.

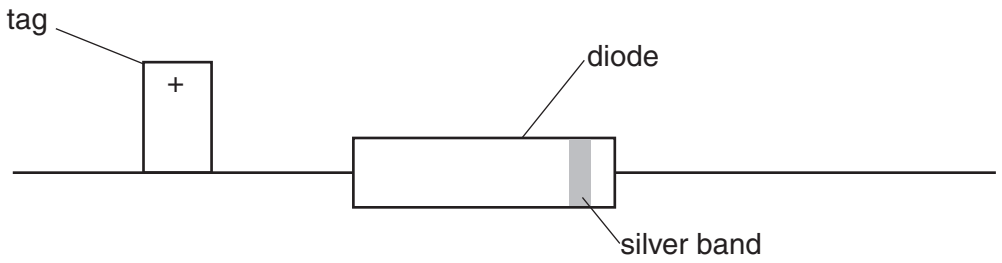

Fig. 1.1

Voltmeter capable of reading voltages up to 1 V. The changes in potential difference in this experiment are not large; therefore the scale on the voltmeter must be such that it can be read to at least 0.01 V. A digital voltmeter or multimeter would be most suitable.

Milliammeter (0 to 10 mA).

d.c. power supply with potentiometer. The arrangement should be capable of delivering potential differences between zero and about 2 V. The potentiometer must be wired to the power supply prior to use by candidates. The positive terminal of the supply should be labelled +. A low voltage power supply unit connected to a 15 Ω wire-wound potentiometer has been found to be suitable.

10 Ω protective resistor for the diode. The resistor should be mounted in such a way that candidates are able to make connections to it without difficulty.

Switch.

250 ml beaker. The beaker should be approximately $\frac{1}{4}$ full of cold water at the start of the experiment.

Thermometer, range –10 to 110 °C.

Supply of crushed ice. Candidates will request the ice shortly after the start of the experiment.

Sufficient connecting wires to enable the circuit in Fig. 1.2 to be constructed.

www.theallpapers.com

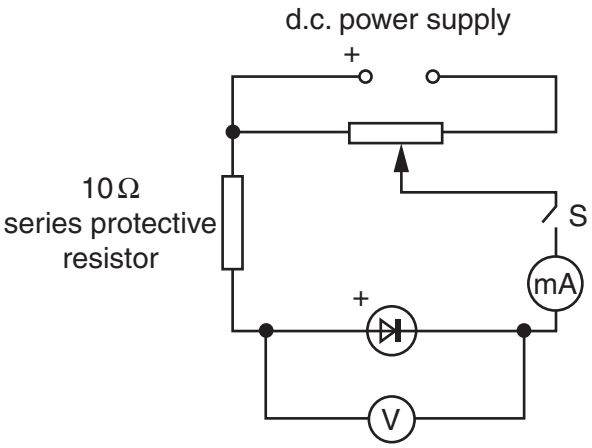

Fig. 1.2

Notes

1 The circuit should not be assembled, apart from the connection of the potentiometer to the power supply.

2 If the apparatus is to be used by a second candidate, the circuit should be dismantled at the end of the first candidate's experiment and the equipment laid out on the bench ready for the next candidate to use. A fresh supply of crushed ice must be available.

3 Supervisors must be particularly vigilant at the beginning of the experiment to ensure that candidates have set up the circuit correctly. The extent of any help given to candidates must be detailed in the Supervisor's Report and sent with the scripts.

Procedure to be followed by candidates

Candidates will set up the apparatus as shown in Fig. 1.2. The diode will be immersed by the candidate in a water/ice mixture. Candidates will take readings of potential difference V and current I as the potential difference across the diode is changed. The temperature of the diode should be maintained at about 0 °C throughout the experiment.

A graph of $\ln(I/\text{A})$ against V should give a straight line of positive gradient which does not pass through the origin.

www.theallpapers.com

Question 2

Question 2 is a design exercise that does not require apparatus.

www.theallpapers.com

BLANK PAGE

www.theallpapers.com

This form should be completed and sent to the Examiner with the scripts.

REPORT ON PRACTICAL PHYSICS

General Certificate of Education Advanced Level

October/November Session 2003

General

The Supervisor is invited to give details, on the reverse of this form, of any difficulties experienced by particular candidates, giving names and index numbers. These should include reference to:

(a) accidents to apparatus or materials;

(b) any other information that is likely to assist the examiner, especially if this cannot be discovered in the scripts;

(c) any help given to a candidate.

Other cases of individual hardship, e.g. illness, disability, should be reported direct to CIE on the normal 'Special Consideration Form'.

In cases of faulty apparatus (not arising from a candidate's mishandling) which prevent the required readings being taken, the following action is permissible.

The Invigilator – in consultation with the Physics teacher responsible for preparing the examination – may allow extra time to give the candidate a fair opportunity of performing the experiment as if the fault had not been present. The candidate should use a spare copy of the Question Paper when the fault has been rectified or when working with a second set of apparatus. The Invigilator is asked to provide CIE with details of such cases of time compensation (a copy being enclosed with the scripts), especially

(i) the candidate's name and index number,

(ii) the extra time allowed,

(iii) notes on the nature of the fault, the action taken to rectify the difficulty and any other comments which would be helpful to the Examiner in making a fair assessment of the candidate's work during the practical examination.

[Turn over

www.theallpapers.com

Information required

A list, by name and index number, of candidates requiring help, with details of help provided

Declaration (to be signed by the Principal)

The preparation of this practical examination has been carried out so as to maintain fully the security of the examination.

Signed .....

Centre Number ……

Name of Centre .....

www.theallpapers.com