VICTORIAN CURRICULUM AND ASSESSMENT AUTHORITY

Victorian Certificate of Education 2002

SUPERVISOR TO ATTACH PROCESSING LABEL HERE

STUDENT NUMBER

										Letter
Figures										
Words										

VCE VET ELECTRONICS

Written examination

Friday 1 November 2002

Reading time: 3.00 pm to 3.15 pm (15 minutes)
Writing time: 3.15 pm to 4.45 pm (1 hour 30 minutes)

QUESTION AND ANSWER BOOK

Structure of book

Section	*Number of questions*	*Number of questions to be answered*	*Number of marks*
1 – DC power supplies	7	7	41
2 – Analogue systems	8	8	22
3 – Digital electronics 1 and Digital and computer systems	8	8	35
			Total 98

- Students are permitted to bring into the examination room: pens, pencils, highlighters, erasers, sharpeners, rulers, an approved graphics calculator (memory cleared) and/or one scientific calculator.
- Students are NOT permitted to bring into the examination room: blank sheets of paper and/or white out liquid/tape.

Materials supplied
- Question and answer book of 21 pages including a formula sheet for Sections 1, 2 and 3 on page 21.

Instructions
- Write your **student number** in the space provided above on this page.
- Answer **all** questions in the spaces provided in this book.
- **Note:** There are no separate items for Mathematics for Electronics 2. Understanding of mathematics has been incorporated into the questions in Sections 1–3.
- State all formulas and calculations.
- All units must be specified in the answers.
- All written responses must be in English.

Students are NOT permitted to bring mobile phones and/or any other electronic communication devices into the examination room.

© VICTORIAN CURRICULUM AND ASSESSMENT AUTHORITY 2002
www.theallpapers.com

SECTION 1 – DC power supplies

Question 1

Switched Mode Power Supplies are used as power supplies for modern electronic equipment such as laptop computers and mobile phones.

The Switched Mode Power Supply is used in preference to a conventional power supply because

A. it is more efficient.

B. it is more compact.

C. it can be designed for varying levels of AC input voltages.

D. All of the above.

1 mark

Question 2

Simple voltage regulation can be achieved by using a Zener diode.

When used in a circuit, a Zener diode is always

A. reverse biased.

B. connected in series.

C. troubled by overheating.

D. forward biased.

1 mark

Question 3

A typical conventional DC power supply is shown in Figure 1 below.

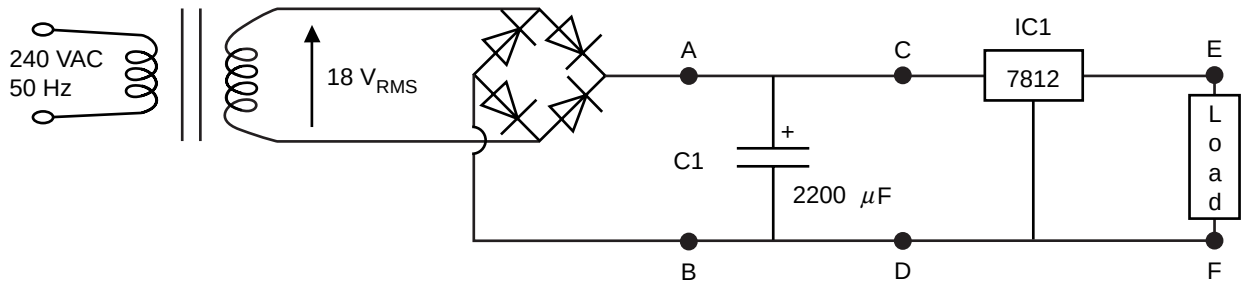

Figure 1

The four stages of the circuit can be represented as a block diagram as shown in Figure 2 below.

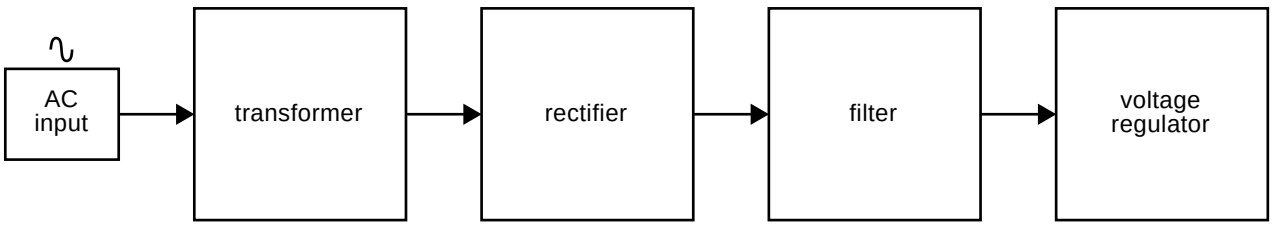

Figure 2

SECTION 1 – Question 3 – continued

www.theallpapers.com

Explain the function of each of the following components of the circuit in Figure 1.

i. Transformer

ii. Rectifier

iii. Filter

iv. Voltage regulator

$4 \times 2 = 8$ marks

www.theallpapers.com

Question 4

The front section of the previous circuit (Figure 1) is used to provide a crude DC supply, as shown in Figure 3.

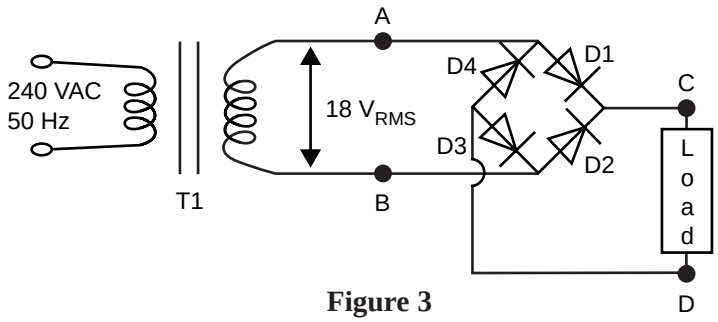

Figure 3

For calculations in parts **a.–c.** assume

T1 is 100% efficient

V_{drop} is 1V for all diodes

Correct units or sub units must be stated in all answers.

a. Calculate V_{peak} between **node A and node B**.

3 marks

b. Calculate V_{peak} between **node C and node D**.

3 marks

c. Determine the Time period of the waveform at **nodes A and B**.

2 marks

www.theallpapers.com

d. On the axes provided below, sketch the output waveform that would be observed between **nodes A and B**. Show at least one full cycle of the **waveform** using the **correct timeline**, and the **peak voltage**.

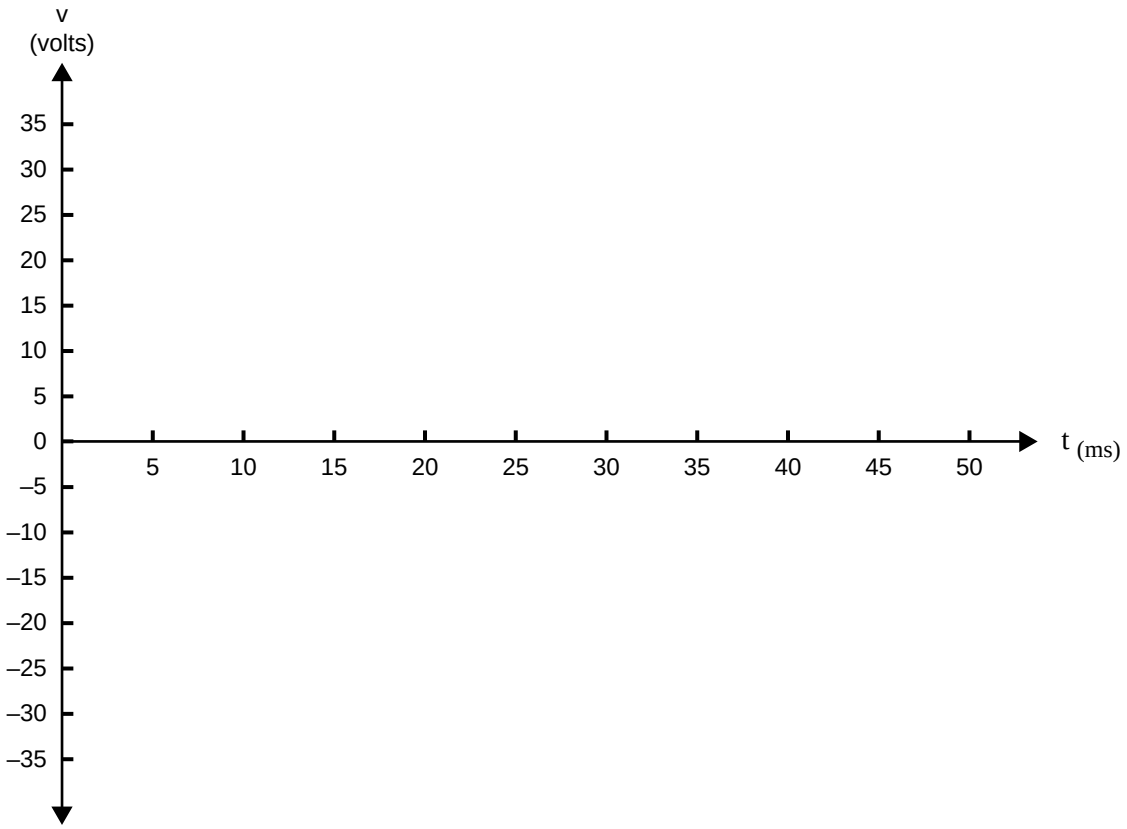

Figure 4

3 marks

e. In Figures 5 and 6 below, clearly draw in arrows showing the conventional current path through the diodes and the load during each cycle of rectification.

Use Figure 5 for the first half cycle and Figure 6 for the second half cycle.

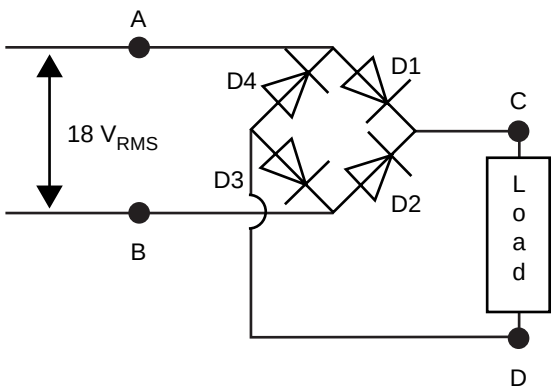

First half cycle
Figure 5

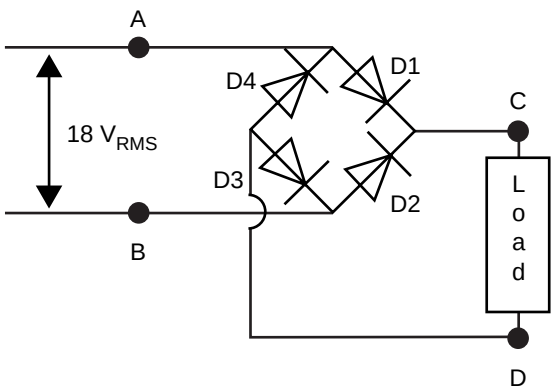

Second half cycle
Figure 6

2 marks

www.theallpapers.com

f. On the axes provided below, sketch the output waveform that would be observed between **nodes C and D**. Show at least two full cycles of the **waveform** using the **correct timeline**, and the **peak voltage**.

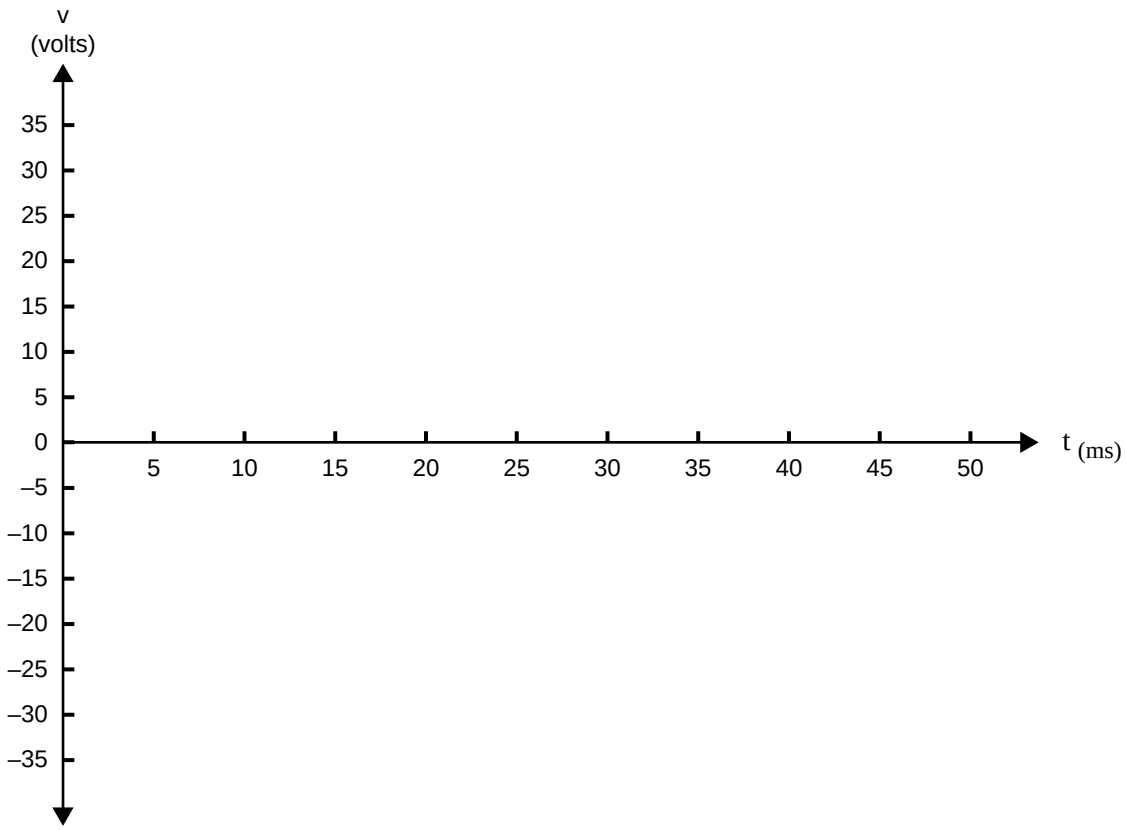

Figure 7

3 marks

g. State the number of diodes that conduct in each half cycle of rectification.

_____

1 mark

h. State the frequency of the waveform between **node C and node D**.

_____

1 mark

Question 5

State two parameters that need to be considered when selecting diodes for use in a rectifier circuit.

1 _____

2 _____

2 marks

www.theallpapers.com

Question 6

A linear power supply, designed for operating a small computer network, is shown below (Figure 8).

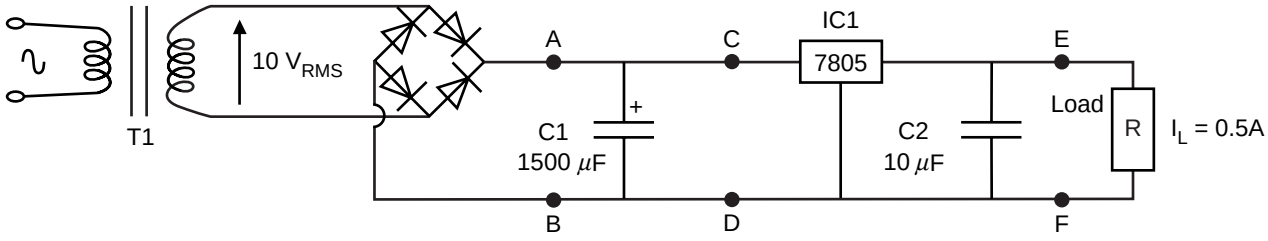

Figure 8

a. State the voltage at the load.

1 mark

b. Calculate the power used by the load.
Correct units must be stated in the answer.

3 marks

c. In this circuit an additional capacitor (C2) has been included. What is the specific function of C2, as distinct from the function of the 1500 μF capacitor C1.

2 marks

d. The voltage regulator is rated at 1 ampere capacity, however it partially shuts down when supplying the current load of 0.5 ampere. How would you solve this problem without redesigning the circuit?

1 mark

www.theallpapers.com

Question 7

A DC power supply can be represented by an equivalent circuit, shown below.

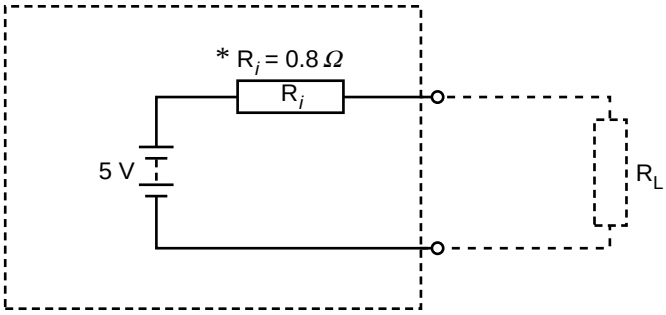

Figure 9

* R_i = resistance internal

a. State the value of R_L for the maximum possible load current.

1 mark

b. Calculate the largest possible load current that could be delivered by this power supply.
Correct units must be stated in the answer.

3 marks

www.theallpapers.com

SECTION 2 – Analogue systems

Question 1

A surface mount resistor has the figures **123** printed on it.

State its resistance value using correct engineering notation.

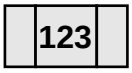

_____

1 mark

Question 2

A polyester 'green cap' capacitor has the figures 223 printed on it. Determine the correct capacitance value. Express the answer using accepted units.

_____

1 mark

Question 3

Determine the correct resistance value for the following resistors from their stated colour code.

All the resistors are a standard four band resistor.

a. **Brown Red Brown Brown**

The resistance value is

A. 1200 Ω

B. 121 Ω

C. 120 Ω

D. 12 Ω

1 mark

b. **Brown Green Red Gold**

The resistance value is

A. 152 Ω

B. 1.5 kΩ

C. 15 kΩ

D. 152 kΩ

1 mark

SECTION 2 – continued
TURN OVER

www.theallpapers.com

Question 4

A computer memory backup capacitor is 0.47 F.

Calculate the quantity of charge the capacitor will store when charged to 5 volts.

Correct units of charge must be stated.

3 marks

Question 5

Explain the **process of energy conversion** that takes place in a speaker when an appropriate audio signal is applied to the inputs and sound is produced.

Detailed representation using block diagrams is acceptable.

A loudspeaker

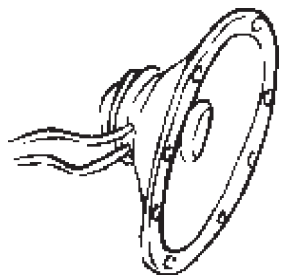

3 marks

SECTION 2 – continued

www.theallpapers.com

Question 6

A transmitter output waveform is observed in a Cathode Ray Oscilloscope as shown.

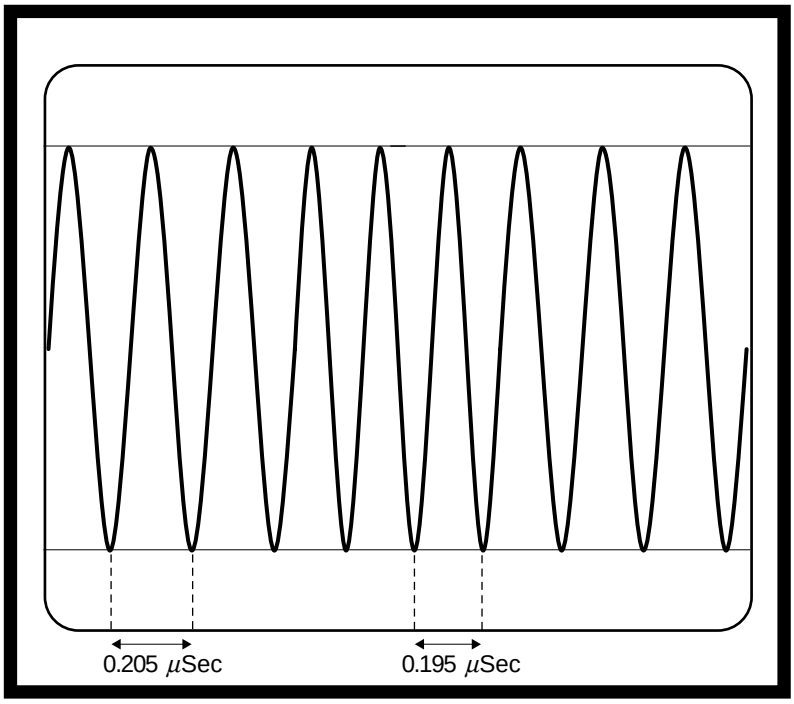

a. State the **type of modulation** present in this waveform.

_____

1 mark

b. Calculate the **highest frequency** as indicated in the waveform.
Correct units must be stated in the answer.

2 marks

c. Calculate the **lowest frequency** as indicated in this waveform.
Correct units must be stated in the answer.

2 marks

www.theallpapers.com

Question 7

The following graph shows $\frac{V}{I}$ responses for three different components.

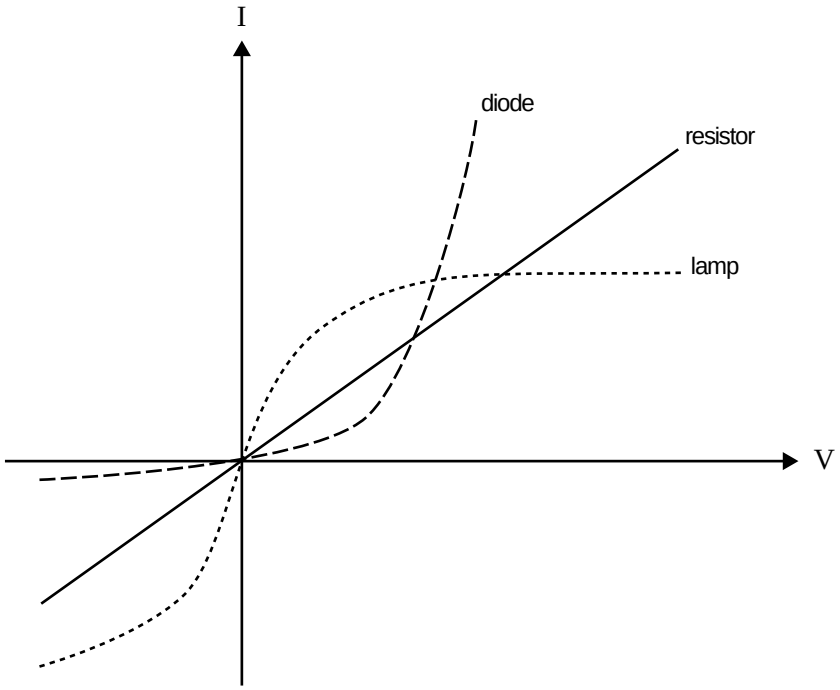

a. Which of the three components is linear in its operation?

_____

1 mark

b. Which of the three components obeys Ohm's Law?

_____

1 mark

www.theallpapers.com

Question 8

Varying light can be used to control circuit operations when an LDR is utilised.

The characteristics of the LDR are shown in the graph below.

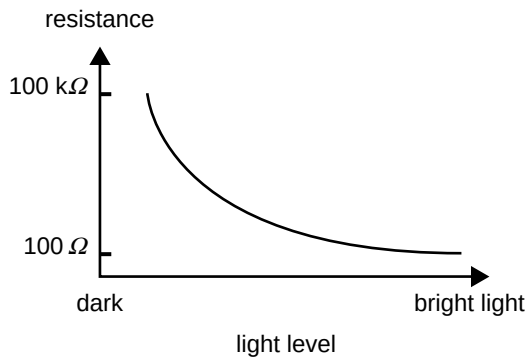

Figure 10

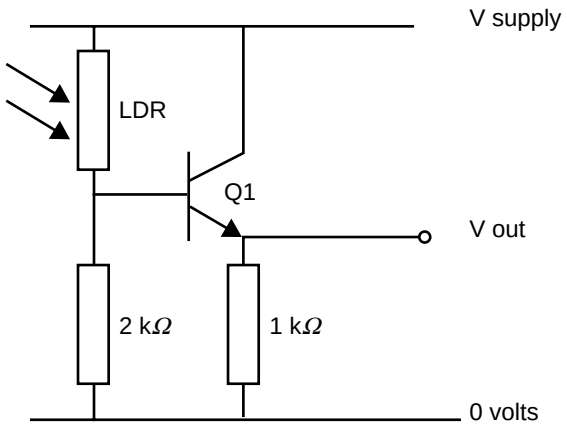

Figure 11

Referring to the circuit diagram above (Figure 11) determine the following.

a. What do the letters **LDR** represent?

_____

1 mark

b. The component 'Q1' is identified as a

A. FET

B. SCR

C. PNP transistor

D. NPN transistor

☐

1 mark

www.theallpapers.com

c. The LDR and 2 kΩ resistor circuit configuration can be identified as

A. a parallel resistor network.

B. a sausage configuration.

C. a voltage divider circuit.

D. a flip flop circuit.

1 mark

Refer to the LDR characteristics graph (Figure 10).

d. When the LDR is in **Darkness**, V_{out} will be

A. near supply voltage.

B. near zero volts.

C. near 1.2 volts.

D. 24 volts AC.

1 mark

e. When the LDR is in **Bright Light**, V_{out} will be

A. near supply voltage.

B. near zero volts.

C. near 1.2 volts.

D. 24 volts AC.

1 mark

END OF SECTION 2

www.theallpapers.com

SECTION 3 – Digital electronics 1 and Digital and computer systems

Question 1

The optical mouse is sometimes used instead of the conventional ball mouse on computers.

State one commonly recognised advantage the optical mouse has over a conventional mouse.

_____

_____

1 mark

Question 2

a. Within a Personal Computer System, the mouse is best described as

A. an output device

B. a parallel interface

C. a ROM

D. an input device

E. a clicker

1 mark

b. An older laptop computer, without a USB port, needs to be connected to a laser printer with a parallel port. Select the most appropriate port on the laptop to use, from the available list.

A. LPT1

B. COM1

C. COM2

D. PS2

1 mark

www.theallpapers.com

Question 3

The circuit below (Figure 12) is a metal pipe locator circuit.

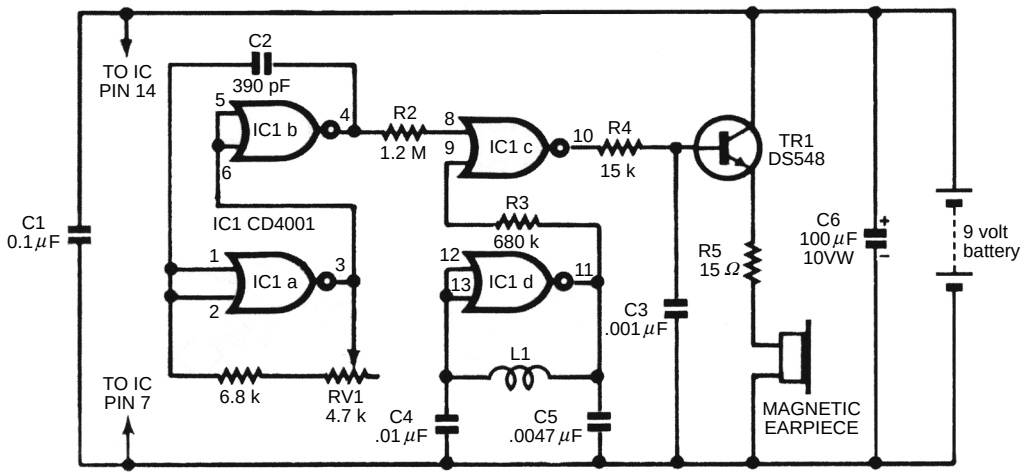

Figure 12

a. State the type of gates contained within the CD4001.

1 mark

b. State the **logic function** being performed by the gate **IC1 a**.

1 mark

c. Figure 12 shows two arrows indicating a connection to the IC pin 14 and IC pin 7. Explain the function of these connections.

2 marks

www.theallpapers.com

Question 4

The diagram (Figure 13) shows an ‘Exclusive OR gate’ constructed from standard logic gates.

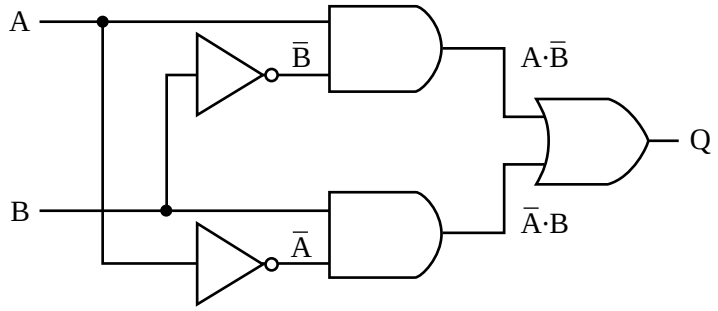

Figure 13

a. Complete the following truth table for the logic functions in Figure 13.

Table 1

B	**A**	$\overline{A}$	$\overline{B}$	$\overline{A} \cdot B$	$A \cdot \overline{B}$	**Q**
0	0					
0	1					
1	0					
1	1					

5 marks

b. State the most simplified Boolean expression for Figure 13.

_____

2 marks

c. Draw the single logic gate symbol that represents an XOR gate.

1 mark

www.theallpapers.com

Question 5

LCD (displays) require more complex circuitry to drive them compared to LED displays.

a. What do the letters **LCD** stand for?

1 mark

b. In portable electronic equipment, LED displays have progressively been replaced with LCDs. State the principal reason for this change.

2 marks

c. When being used in a circuit, state the **input logic level** required by a **common anode** seven-segment LED display for segment illumination.

1 mark

www.theallpapers.com

Connection Diagrams

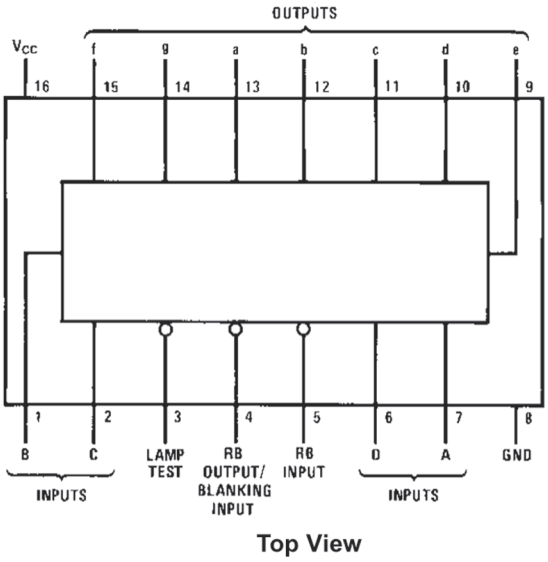

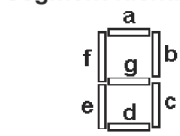

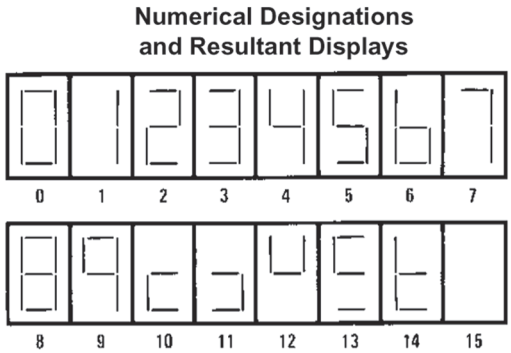

Question 6

Refer to the data sheet extract provided above.

There are **three** inputs specified in the table below.

For each input you are required to

- indicate illuminated **display segments** using 'H'
- indicate non illuminated **display segments** using 'L'
- indicate the **final display showing**, by shading the segments which are illuminated.

Place all answers in the table below.

	INPUTS	DISPLAY SEGMENT							FINAL DISPLAY SHOWING (Shade illuminated segments)
	msb lsb DCBA	a	b	c	d	e	f	g	
i.	**0101** Assume LT and BI/BRO held high								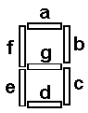
ii.	**1001** Assume LT and BI/BRO held high								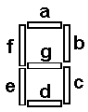
iii.	**1111** Assume LT held low								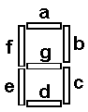

6 marks

www.theallpapers.com

Question 7

Complete the following number conversions.

a.

Decimal	Binary	BCD
79		

b.

Hexadecimal	Binary	Decimal
A3		

2 + 2 = 4 marks

Question 8

An analogue signal is converted to a digital output by the ADC.

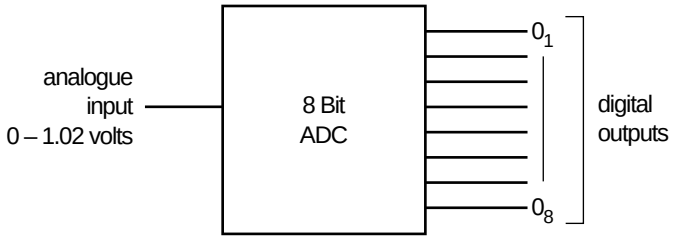

a. Calculate how many possible 8 bit binary numbers are available to represent different analogue input voltage levels.

2 marks

b. If full scale input is 1.02 volts, calculate the smallest input voltage change which will be detected at the digital output.

2 marks

c. If the binary output changed from 1000 0000 (msb lsb) to 1000 0100 (msb lsb), calculate the input voltage change that has occurred.

2 marks

www.thealipapers.com

Formulas

$V = IR \qquad I = \frac{V}{R}$

$V_{peak} = \sqrt{2}\, V_{RMS}$

$Q = C \times V$

$f = \frac{1}{T} \qquad T = \frac{1}{f}$

$P = V \times I$

$\text{voltage step} = \frac{\text{voltage full scale}}{\text{number of steps}}$

$\Delta\, V\ \text{input} = \Delta\ \text{output} \times \text{voltage step}$

END OF QUESTION AND ANSWER BOOK

www.theallpapers.com